Qualitatively reliable numerical models of time-dependent problems

István Faragó

Farkas Miklós Seminar

September 21, 2017,

Budapest, Hungary

Joint work with .....

Outline

Outline

Outline

Outline

Outline

1. Introduction and motivation

Modelling process

Physical model $\rightarrow$ Mathematical model $\rightarrow$ Numerical model

The mathematical model and numerical model on the fixed mesh should preserve the basic (physically motivated) qualitative properties

Convergence for the numerical model is a necessary requirement. BUT: Not only the condition of the convergence should be taken into the consideration.

What is the relation in the numerical model between the conditions of the convergence and the qualitative preservation?

Numerical solution and qualitative properties

What are we expecting from the (numerical) solution?

- to possess some adequate qualitative properties,
- to be a good approximation of the real solution $\Rightarrow$ convergence

Physical properties of heat conduction processes

Heat conduction phenomenon (without source) in 1D with homogeneous first boundary condition. Adequate behaviour of the process

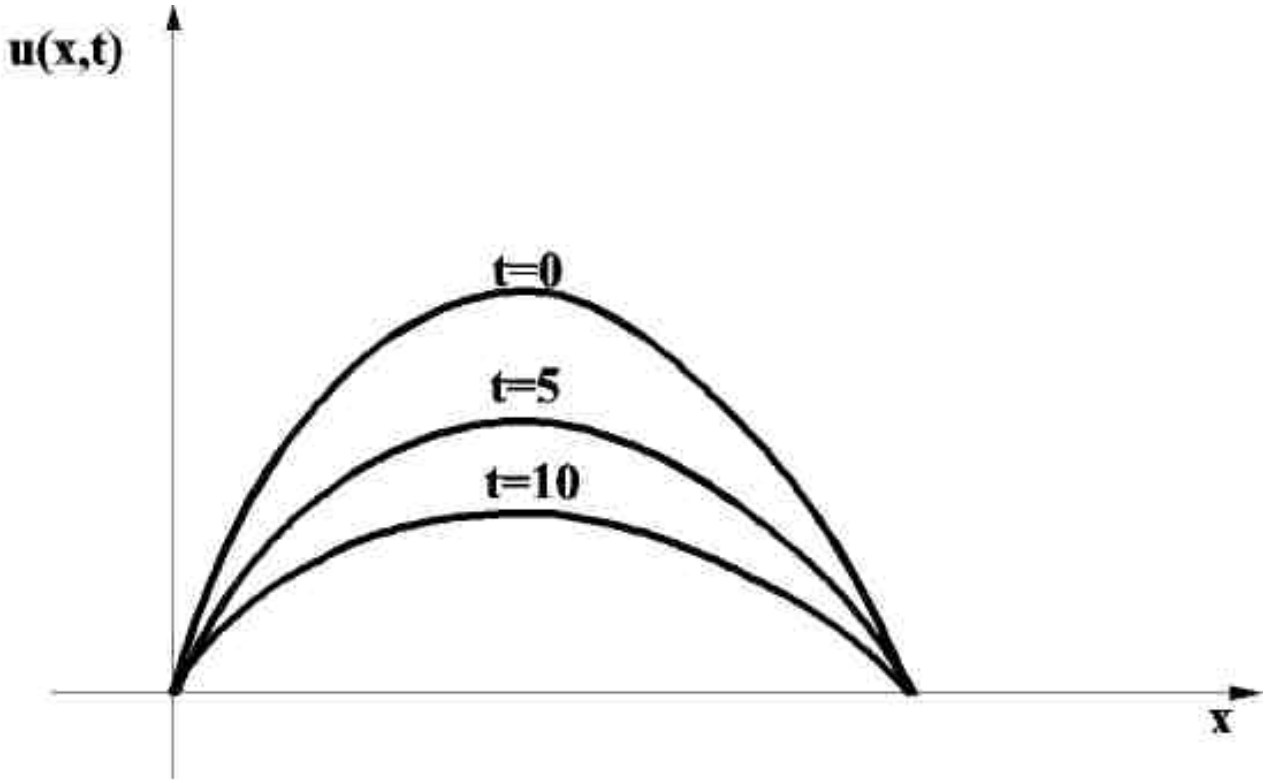

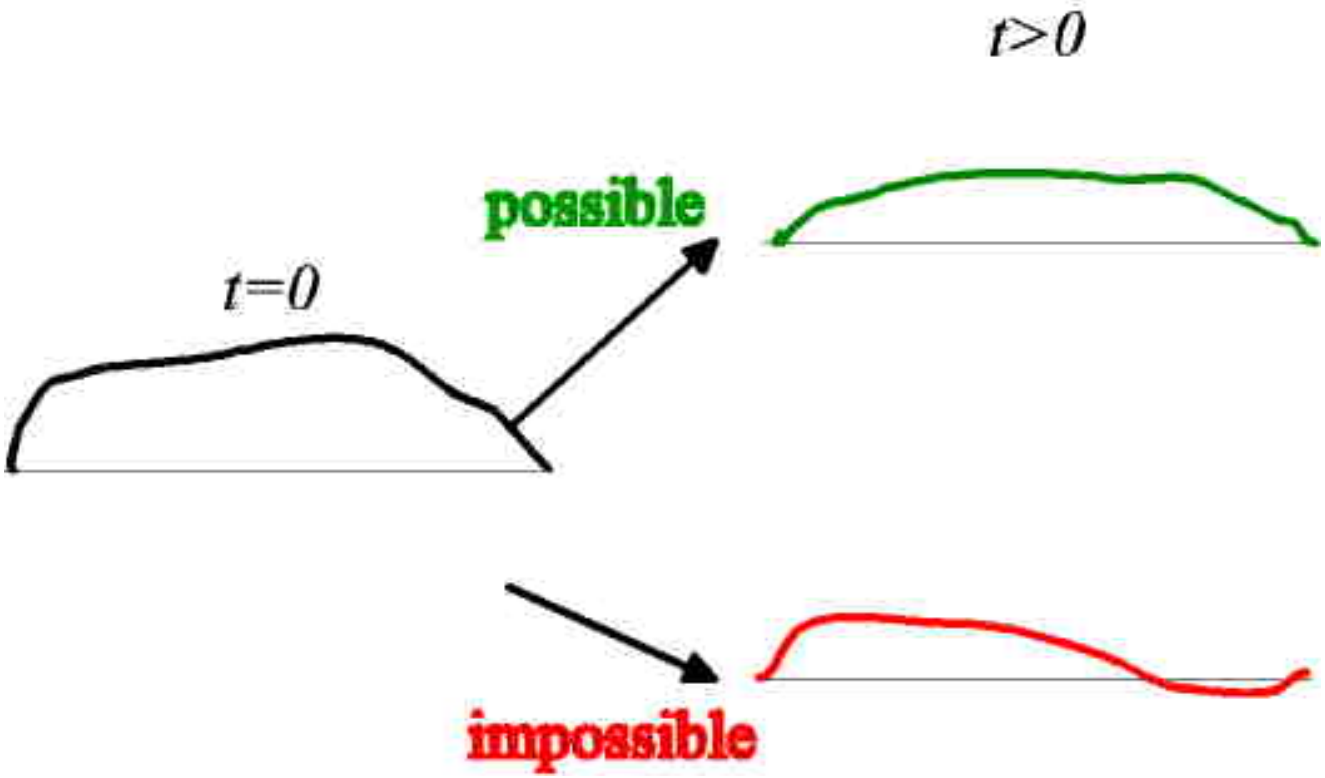

Figure: Nonnegativity

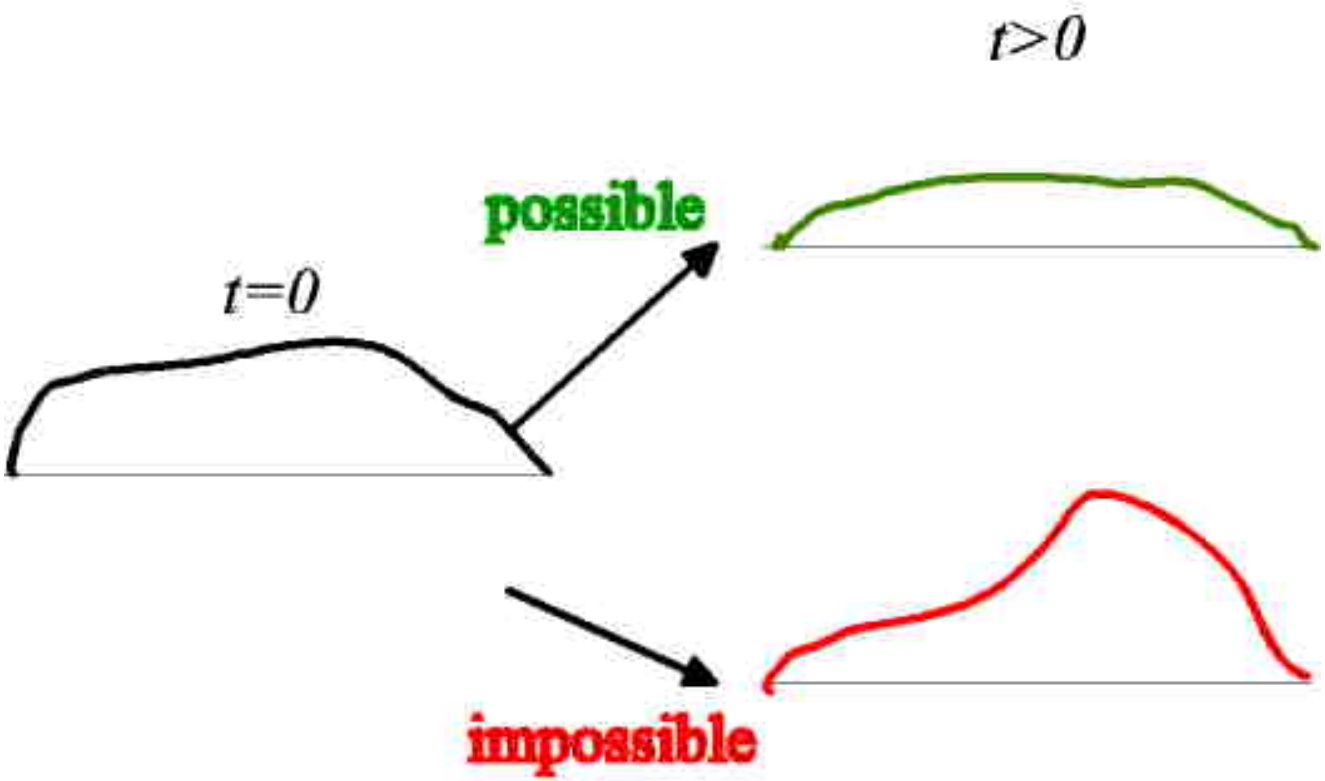

Figure: Increase of the maximum

Different qualitative properties!!! The most characteristic (physically based) properties:

- non-negativity preservation
- maximum-minimum principle
- contractivity in maximum norm

There are many others, e.g.

- shape preservation
- monotone decrease in time
- sign-stability, etc.

Numerical Example

Problem: two-dimensional heat equation on the unit square with homogeneous boundary condition.

$$\frac{\partial v}{\partial t} - \sum_{l=1}^{2} \frac{\partial^2 v}{\partial x_l^2} = 0, \quad g = 0$$

initial function:

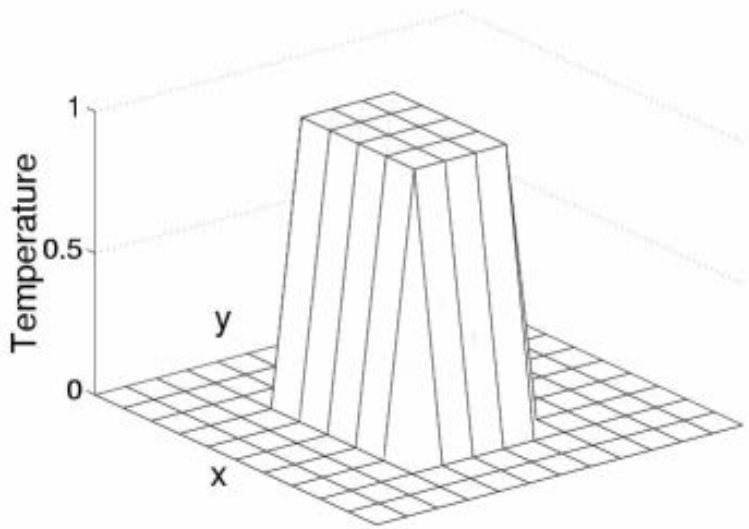

$\Omega = [0,1] \times [0,1]$,

Numerical method:FEM, bilinear elements

step-sizes in space: $\Delta x = 1/10$, $\Delta y = 1/12$,

$\theta = 1/2$, Crank-Nicolson (absolute stable!)

Numerical Example – Results

Approximations at the 10th time level.

$$\Delta t = 0.1$$

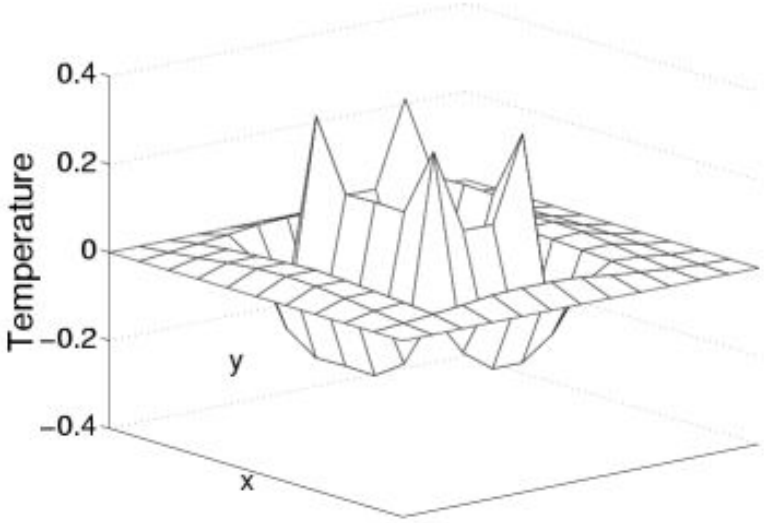

Numerical Example – Results

Approximations at the 10th time level.

$\Delta t = 0.1$

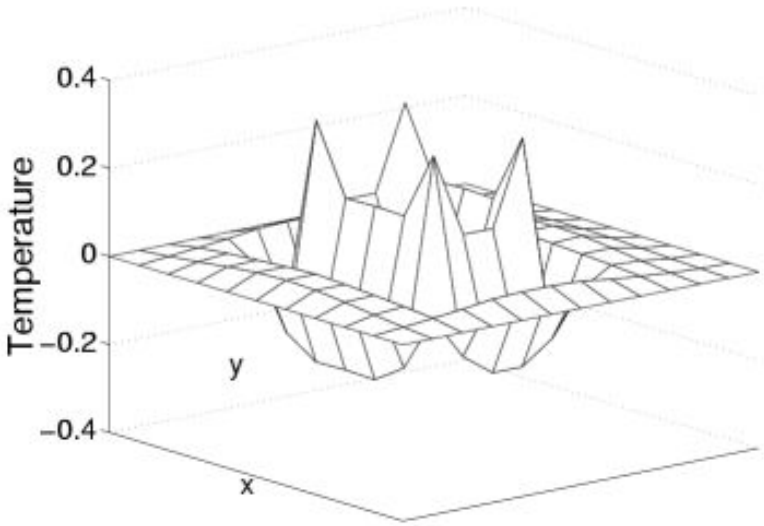

$\Delta t = 0.0005$

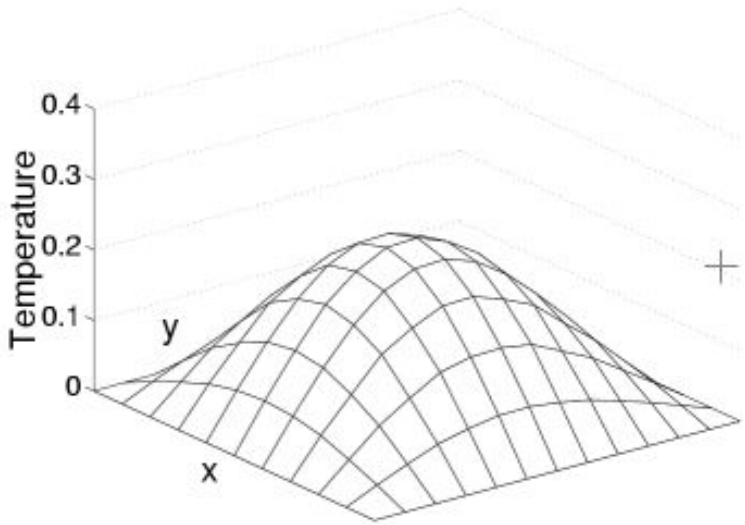

Numerical Example – Results (cont'd)

Approximation at the 10th time level.

$$\Delta t = 0.0001$$

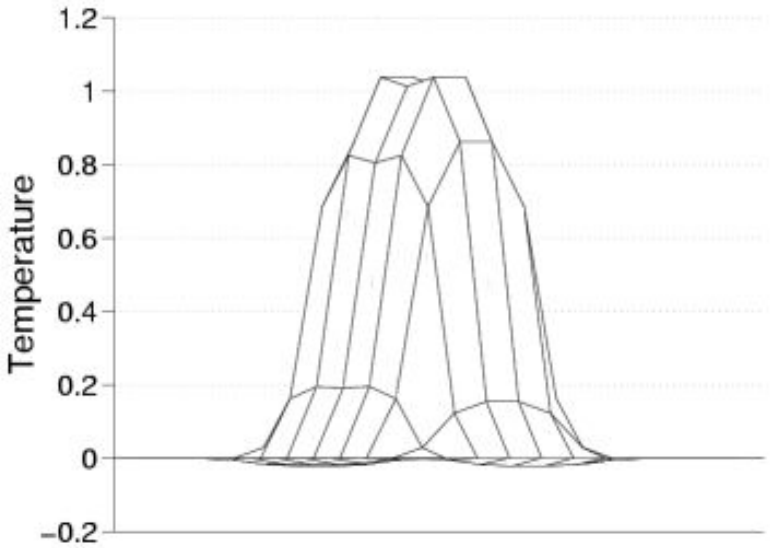

Numerical Example – Results (cont'd)

Approximation at the 10th time level.

$$\Delta t = 0.0001$$

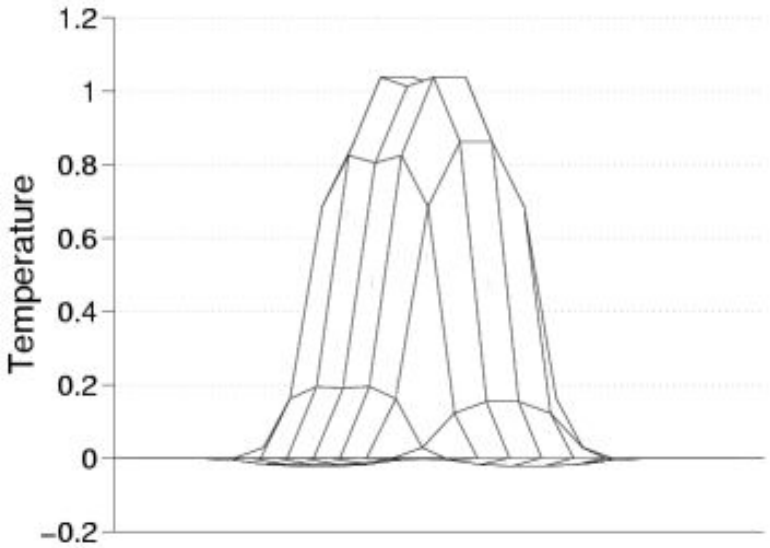

The nonnegativity of the initial temperature is not preserved.

Other problems:

1. for $\Delta t = 0.0001$ it breaks the maximum-minimum principle and the maximum norm contractivity property
2. for $\Delta t = 0.1$ it produces spurious oscillations

2. Linear parabolic problems

Partial differential operators of parabolic type

Definition of the solution domain for the parabolic problems:

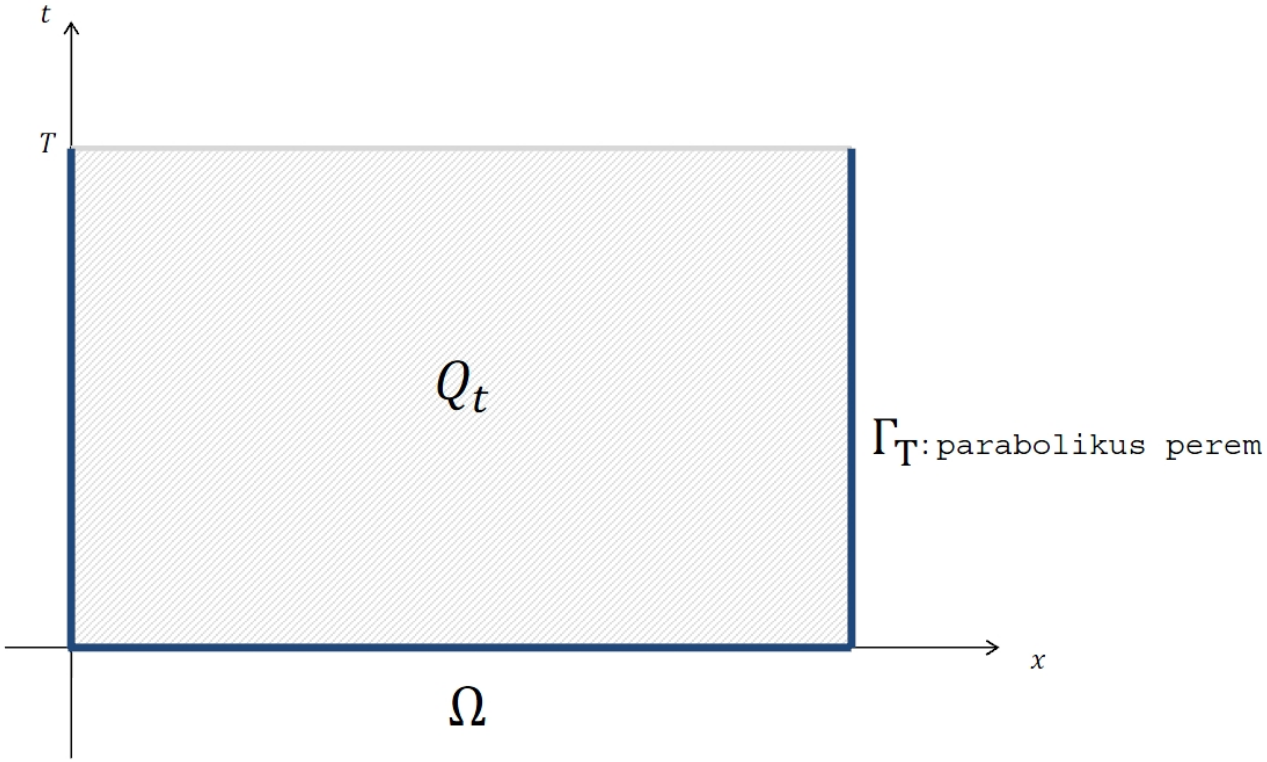

Figure: Solution domain

We consider the linear partial differential operator

$$L \equiv \frac{\partial}{\partial t} - \sum_{0 \le |\varsigma| \le \delta} a_\varsigma \frac{\partial^{|\varsigma|}}{\partial^{\varsigma_1} x_1 \dots \partial^{\varsigma_d} x_d} \equiv \frac{\partial}{\partial t} - \sum_{0 \le |\varsigma| \le \delta} a_\varsigma D^\varsigma, \qquad (1)$$

For the constant function: $L(const) = a_0 \cdot const$

Special case: diffusion operator of the form

$$L_{diff}(v) \equiv \frac{\partial v}{\partial t} - \sum_{l=1}^{d} \frac{\partial^2 v}{\partial x_l^2}$$

$(a_0 = 0)$

Hence: $L_{diff}(const) = 0$.

Maximum-minimum principles

Definition

Weak maximum-minimum principle (WMP): for any function $v \in \operatorname{dom} L$

$$\begin{gathered}\min\{0, \min_{\Gamma_{t_1}} v\} + t_1 \cdot \min\{0, \inf_{Q_{\bar{t}_1}} Lv\} \leq v(\mathbf{x}, t_1) \leq \\ \max\{0, \max_{\Gamma_{t_1}} v\} + t_1 \cdot \max\{0, \sup_{Q_{\bar{t}_1}} Lv\}\end{gathered} \tag{2}$$

holds for all $\mathbf{x} \in \Omega,\ t_1 \in (0, T)$.

Definition

Strong maximum-minimum principle (SMP): for any function $v \in \operatorname{dom} L$

$$\min_{\Gamma_{t_1}} v + t_1 \cdot \min\{0, \inf_{Q_{\bar{t}_1}} Lv\} \leq v(\mathbf{x}, t_1) \leq \max_{\Gamma_{t_1}} v + t_1 \cdot \max\{0, \sup_{Q_{\bar{t}_1}} Lv\} \tag{3}$$

is satisfied for all $\mathbf{x} \in \Omega,\ t_1 \in (0, T)$.

Boundary maximum-minimum principles

Definition

Weak boundary maximum-minimum principle (WBMP): for any function $v \in \operatorname{dom} L$ and $t_1 \in (0, T)$ such that $Lv|_{Q_{\bar{t}_1}} = 0$ the inequalities

$$\min\{0, \min_{\Gamma_{t_1}} v\} \leq \min_{\bar{Q}_{t_1}} v, \qquad \max\{0, \max_{\Gamma_{t_1}} v\} \geq \max_{\bar{Q}_{t_1}} v$$

hold.

Definition

Strong boundary maximum-minimum principle (SBMP): for any function $v \in \operatorname{dom} L$ and $t_1 \in (0, T)$ such that $Lv|_{Q_{\bar{t}_1}} = 0$ the inequalities

$$\min_{\Gamma_{t_1}} v = \min_{\bar{Q}_{t_1}} v, \qquad \max_{\Gamma_{t_1}} v = \max_{\bar{Q}_{t_1}} v$$

hold.

Relations between the maximum-minimum principles

Theorem

Between the maximum-minimum principles the following implications are valid.

$$\begin{array}{ccc} SMP & \Longrightarrow & WMP \\ \Downarrow & & \Downarrow \\ SBMP & \Longrightarrow & WBMP \end{array}$$

Definitions

Definition

Non-negativity preservation (NP): for any $v \in \operatorname{dom} L$ and $t_1 \in (0, T)$ such that $\min_{\Gamma_{t_1}} v \geq 0$ and $Lv|_{Q_{\bar{t}_1}} \geq 0$, the relation $v|_{Q_{\bar{t}_1}} \geq 0$ holds.

Definition

Contractivity in maximum norm (MNC): for all arbitrary two functions $v^\star$, $v^{\star\star} \in \operatorname{dom} L$ and $t_1 \in (0, T)$ such that $Lv^\star|_{Q_{\bar{t}_1}} = Lv^{\star\star}|_{Q_{\bar{t}_1}}$ and $v^\star|_{\partial\Omega\times[0,t_1]} = v^{\star\star}|_{\partial\Omega\times[0,t_1]}$, the relation

$$\max_{\mathbf{x}\in\bar{\Omega}} |v^\star(\mathbf{x}, t_1) - v^{\star\star}(\mathbf{x}, t_1)| \leq \max_{\mathbf{x}\in\bar{\Omega}} |v^\star(\mathbf{x}, 0) - v^{\star\star}(\mathbf{x}, 0)|$$

is valid.

Basic relations

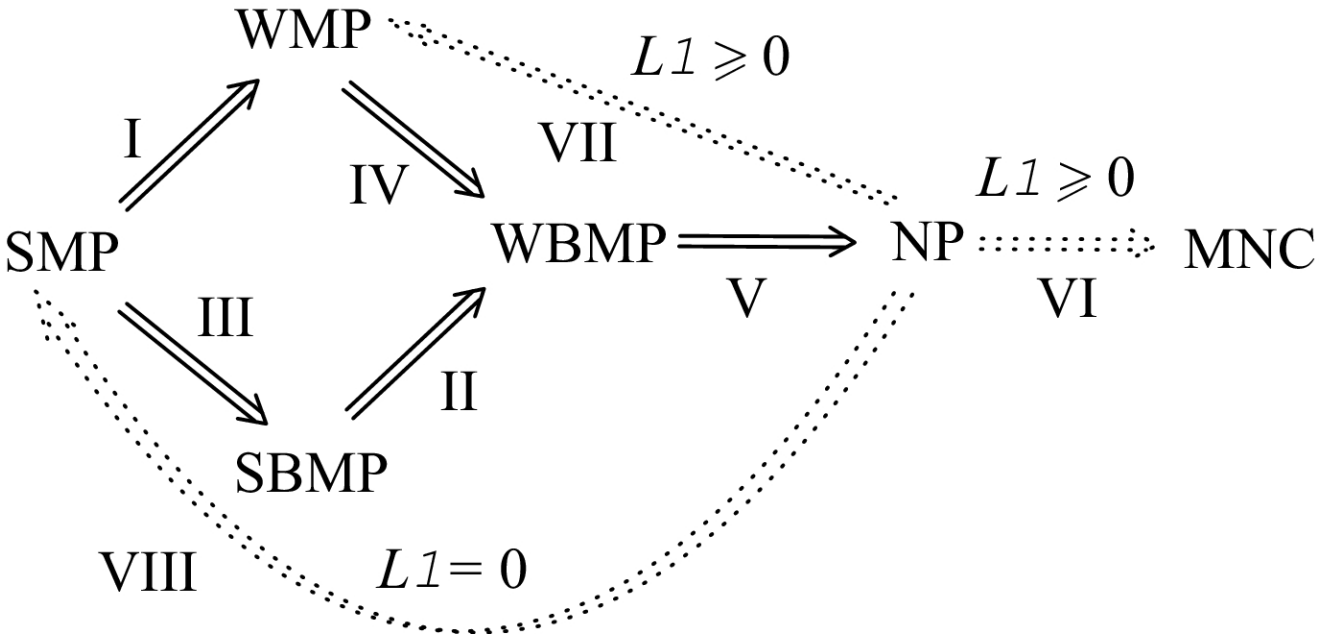

Figure: Implications for the qualitative properties

For the heat equation without source function $L1 = a_0 = 0$ therefore all implications are valid and the NP-property implies all the other qualitative properties.

Meshes and discrete operator

Mesh function: ν: real-valued function defined on $\bar{\mathcal{Q}}_{t_M}$.
Mesh operator: discrete linear operator $\mathcal{L}$ which maps as follows:

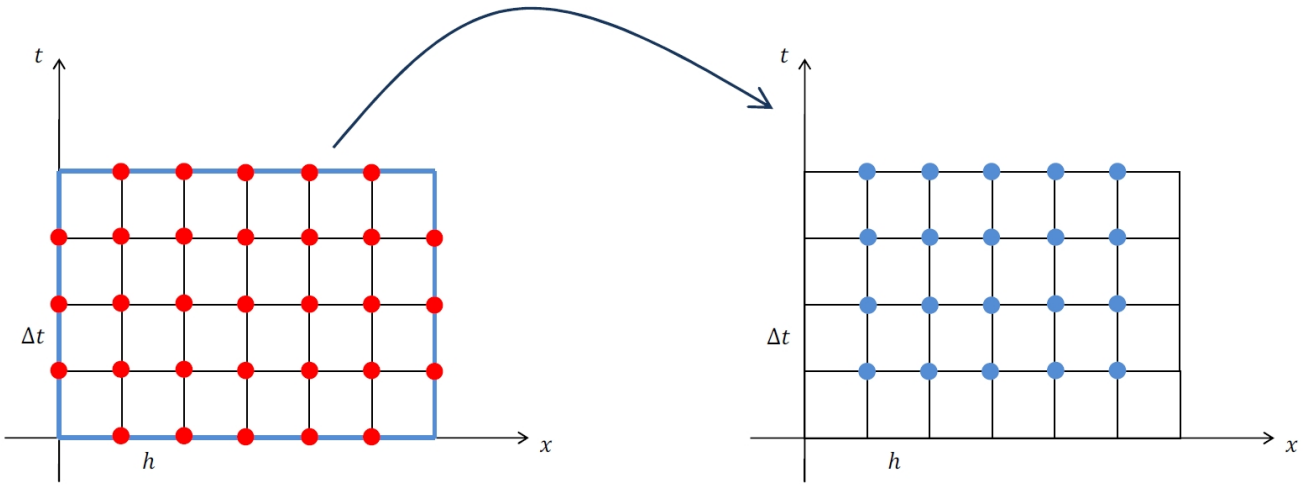

Figure: Discrete operator

Maximum principle

Each definition is the discrete analog of the continuous case!

Definition

Discrete weak maximum-minimum principle (DWMP):

$$\min\{0, \min_{\mathcal{G}_{t_1}} \nu\} + t_1 \cdot \min\{0, \inf_{\mathcal{Q}_{\bar{t}_1}} \mathcal{L}\nu\} \leq \nu(\mathbf{x}_i, t_1) \leq \max\{0, \max_{\mathcal{G}_{t_1}} \nu\} + t_1 \cdot \max\{0, \sup_{\mathcal{Q}_{\bar{t}_1}} \mathcal{L}\nu\} \tag{4}$$

for any mesh function $\nu \in \operatorname{dom} \mathcal{L}$ is satisfied for all $\mathbf{x}_i \in \mathcal{P}$, $t_1 \in \mathcal{R}_{t_M}$.

Definition

Discrete strong maximum-minimum principle (DSMP):

$$\min_{\mathcal{G}_{t_1}} \nu + t_1 \cdot \min\{0, \inf_{\mathcal{Q}_{\bar{t}_1}} \mathcal{L}\nu\} \leq \nu(\mathbf{x}_i, t_1) \leq \max_{\mathcal{G}_{t_1}} \nu + t_1 \cdot \max\{0, \sup_{\mathcal{Q}_{\bar{t}_1}} \mathcal{L}\nu\} \tag{5}$$

for any mesh function $\nu \in \operatorname{dom} \mathcal{L}$ is satisfied for all $\mathbf{x}_i \in \mathcal{P}$, $t_1 \in \mathcal{R}_{t_M}$.

Maximum principle(cont'd)

Definition

Discrete weak boundary maximum-minimum principle (DWBMP): for any function $\nu \in \operatorname{dom} \mathcal{L}$ and $t_1 \in \mathcal{R}_{t_M}$ such that $\mathcal{L}\nu|_{\mathcal{Q}_{\bar{t}_1}} = 0$ we have

$$\min\{0, \min_{\mathcal{G}_{t_1}} \nu\} \leq \min_{\bar{\mathcal{Q}}_{t_1}} \nu, \qquad \max\{0, \max_{\mathcal{G}_{t_1}} \nu\} \geq \max_{\bar{\mathcal{Q}}_{t_1}} \nu.$$

Definition

Discrete strong boundary maximum-minimum principle (DSBMP): for any function $\nu \in \operatorname{dom} \mathcal{L}$ and $t_1 \in \mathcal{R}_{t_M}$ such that $\mathcal{L}\nu|_{\mathcal{Q}_{\bar{t}_1}} = 0$ we have

$$\min_{\mathcal{G}_{t_1}} \nu = \min_{\bar{\mathcal{Q}}_{t_1}} \nu, \qquad \max_{\mathcal{G}_{t_1}} \nu = \max_{\bar{\mathcal{Q}}_{t_1}} \nu.$$

Relation between the maximum principles

Theorem

Between the discrete maximum-minimum principles the following implications are valid.

$$\begin{array}{ccc} DSMP & \Longrightarrow & DWMP \\ \Downarrow & & \Downarrow \\ DSBMP & \Longrightarrow & DWBMP \end{array}$$

Non-negativity preservation and contractivity

Definition

Discrete non-negativity preservation (DNP): for any $\nu \in \operatorname{dom} \mathcal{L}$ and $t_1 \in \mathcal{R}_{t_M}$ such that $\min_{\mathcal{G}_{t_1}} \nu \geq 0$ and $\mathcal{L}\nu|_{\mathcal{Q}_{\bar{t}_1}} \geq 0$, the relation $\nu|_{\mathcal{Q}_{\bar{t}_1}} \geq 0$ holds.

Definition

Discrete contractivity in maximum norm (DMNC): for any two functions $\nu^\star, \nu^{\star\star} \in \operatorname{dom} \mathcal{L}$ and $t_1 \in \mathcal{R}_{t_M}$ such that $\mathcal{L}\nu^\star|_{\mathcal{Q}_{\bar{t}_1}} = \mathcal{L}\nu^{\star\star}|_{\mathcal{Q}_{\bar{t}_1}}$ and $\nu^\star|_{\mathcal{P}_\partial \times \mathcal{R}^0_{\bar{t}_1}} = \nu^{\star\star}|_{\mathcal{P}_\partial \times \mathcal{R}^0_{\bar{t}_1}}$, the relation

$$\max_{\mathbf{x}_i \in \bar{\mathcal{P}}} |\nu^\star(\mathbf{x}_i, t_1) - \nu^{\star\star}(\mathbf{x}_i, t_1)| \leq \max_{\mathbf{x}_i \in \bar{\mathcal{P}}} |\nu^\star(\mathbf{x}_i, 0) - \nu^{\star\star}(\mathbf{x}_i, 0)|$$

holds.

Relation between the discrete qualitative properties

Connection between the discrete qualitative proerties:

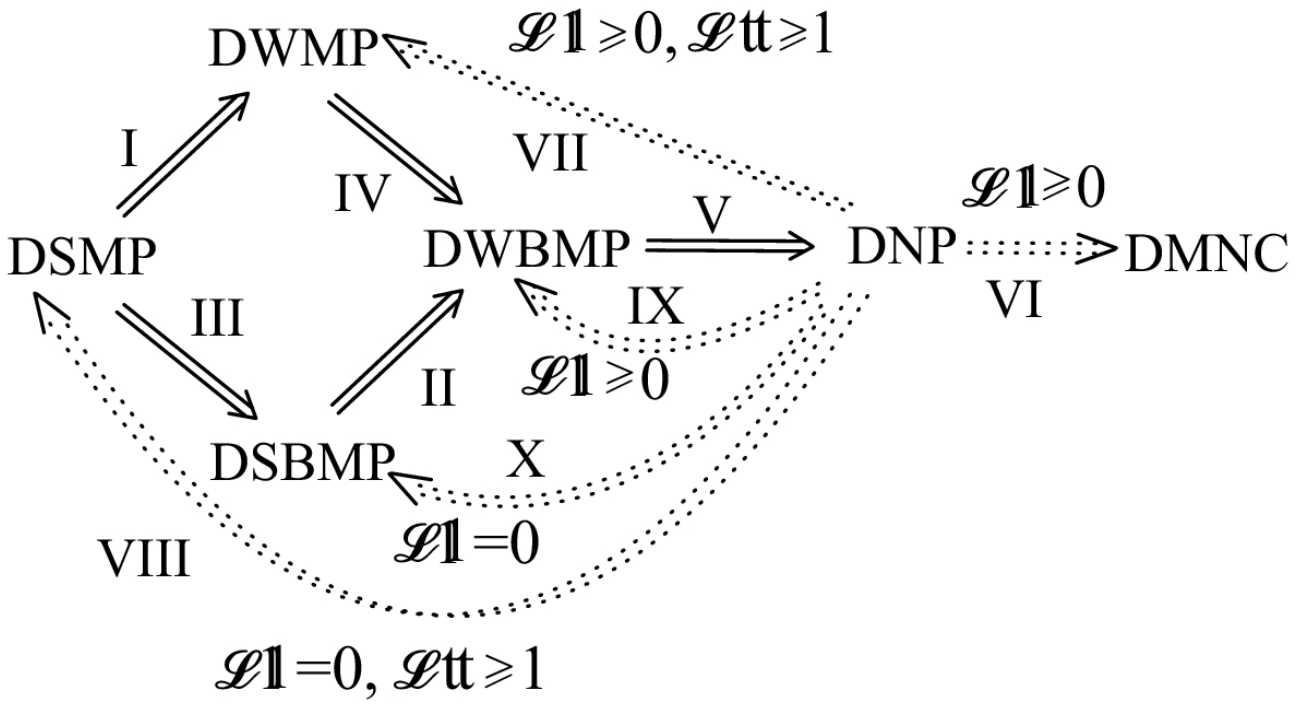

Figure: Implications for the discrete operators

Here $\mathbb{1}(\mathbf{x}_i, t_n) = 1$ and $tt(\mathbf{x}_i, t_n) = n\Delta t$.

Relation between the discrete qualitative properties

Therefore:
If $\mathcal{L}(\mathbb{1}) = 0$ and $\mathcal{L}tt \geq \mathbb{1}$ then all implications are true. Hence, under these conditions DNP implies all the other discrete qualitative properties.

3. Two-levels discrete model

An important example

Special discrete linear operator $\mathcal{L}$:

$$(\mathcal{L}\nu)_i^n = (\mathbf{X}_1\nu^n - \mathbf{X}_2\nu^{n-1})_i, \quad i = 1, \ldots, N, \quad n = 1, \ldots, M, \tag{6}$$

What are the above conditions?

Condition for the qualitative properties

(The operator: $(\mathcal{L}\nu)_i^n = (\mathbf{X}_1\nu^n - \mathbf{X}_2\nu^{n-1})_i$.)

First condition: $\mathcal{L}(\mathbb{1}) = 0 \Leftrightarrow (\mathbf{X}_1 - \mathbf{X}_2)\mathbf{e} = 0$ (where $\mathbf{e}_i = 1$ for all i)

Second condition: $\mathcal{L}(tt) \geq \mathbb{1} \Leftrightarrow \mathbf{X}_1(n\Delta t \cdot \mathbf{e}) - \mathbf{X}_2((n-1)\Delta t \cdot \mathbf{e}) \geq \mathbf{e}$

Assume that the first condition is satisfied. If one of the conditions

$$\mathbf{X}_1\mathbf{e} \geq \frac{1}{\Delta t}\mathbf{e} \quad \text{or} \quad \mathbf{X}_2\mathbf{e} \geq \frac{1}{\Delta t}\mathbf{e}$$

is satisfied then the second condition is also valid.

4. Heat conduction problem

Continuous and discrete equation in 1D

Let us consider the 1D parabolic initial boundary value problem

$$Lv \equiv \frac{\partial v}{\partial t} - \frac{\partial^2 v}{\partial x^2} = f, \quad \text{in } (0,1) \times (0,T) \tag{7}$$

$$v(0,t) = v(1,t) = 0, \tag{8}$$

$$v(x,0) \text{ is given .} \tag{9}$$

This problem preserves the nonnegativity, fulfills the strong maximum-minimum principle and contractive in maximum norm.

The numerical solution:

$$\mathbf{M}\frac{\nu^{n+1} - \nu^n}{\Delta t} + \theta \mathbf{K}\nu^{n+1} + (1-\theta)\mathbf{K}\nu^n = \eta^{(n,\theta)}, \tag{10}$$

where $\eta^{(n,\theta)} := \theta\eta^{n+1} + (1-\theta)\eta^n$, and θ is a parameter from the interval $[0,1]$.

Conditions for the qualitative properties

$$\mathbf{X}_1 - \mathbf{X}_2 = \frac{1}{h}\mathbf{K}$$

and

$$(\mathbf{X}_1 - \mathbf{X}_2)\mathbf{e} = \mathbf{0}. \quad \mathbf{X}_2\mathbf{e} = \frac{1}{h\Delta t}\mathbf{M}\mathbf{e} = \frac{1}{\Delta t}\mathbf{e}.$$

Both conditions are satisfied!

Relations between the basic qualitative properties:

$$\begin{array}{ccc} \text{DSMP} & \Leftrightarrow & \text{DNP} \\ & & \Downarrow \\ & & \text{DMNC} \end{array}$$

If the DNP property is satisfied then all the other properties are also valid.

Our aim: give the conditions for the non-negativity preservation in 1D.

Conditions for the non-negativity

For the finite difference method:

$$\mathbf{M} = h\mathbf{I} \quad \mathbf{K} = \frac{1}{h}\text{tridiag}\,[-1, 2, -1],$$

For linear finite element method.

$$\mathbf{M} = \frac{h}{6}\text{tridiag}\,[1, 4, 1], \quad \mathbf{K} = \frac{1}{h}\text{tridiag}\,[-1, 2, -1],$$

Conditions:

$$\mathbf{X}_1^{-1} \geq 0 \quad \text{and} \quad \mathbf{X}_1^{-1}\mathbf{X}_2 \geq 0.$$

Using the special structure of the matrices, we can get strict conditions for the number $q := \frac{\Delta t}{h^2}$.

Two kinds of bounds:

- uniform (valid for all space partitions)
- depending on the dimension of the matrices (on h).

Non-negativity of the finite difference scheme

- For $\theta = 0$: only under the condition $q \leq 0.5$.
- For $\theta = 1$: no condition.
  For the values $\theta \in (0, 1)$
  - For each N: iff under the condition

$$q \leq \frac{1}{2(1-\theta)}.$$

  - For each $N \geq 2$: iff under the condition

$$q \leq \frac{2\theta - 1 + \sqrt{1 - \theta(1-\theta)}}{3\theta(1-\theta)}.$$

  - There exists an N_0 such that the FDM is non-negativity preserving for all $N \geq N_0$ only under the condition

$$\frac{1}{2(1-\theta)} < q < \frac{1 - \sqrt{1-\theta}}{\theta(1-\theta)}.$$

Non-negativity of the linear finite element scheme

- For each N: iff under the condition

$$\frac{1}{6\theta} \leq q \leq \frac{1}{3(1-\theta)}.$$

  There is a lower bound, too. Moreover, $\theta \in [1/3, 1]$ only.

- For each $N \geq 2$: iff under the condition

$$\frac{1}{6\theta} \leq q \leq \frac{3(2\theta-1)+\sqrt{9-16\theta(1-\theta)}}{12\theta(1-\theta)}.$$

- The necessary condition for existing an N_0 number such that the FEM is non-negativity preserving for all $N \geq N_0$ can be obtained by solving some algebraic equation.

5. The Crank-Nicolson discretized heat conduction model

The Crank-Nicolson discretized heat conduction models

$\theta = 0.5$ in the general θ-method.

Discretization by the Crank-Nicolson method:

$$\mathbf{M}\frac{\boldsymbol{\nu}^{n+1} - \boldsymbol{\nu}^{n}}{\Delta t} + 0.5\mathbf{K}\boldsymbol{\nu}^{n+1} + 0.5\mathbf{K}\boldsymbol{\nu}^{n} = \widetilde{\boldsymbol{\eta}}^{(n,\theta)} := 0.5\widetilde{\boldsymbol{\eta}}^{n+1} + 0.5\widetilde{\boldsymbol{\eta}}^{n}. \quad (11)$$

History of the Crank-Nicolson method

The Crank-Nicolson method:

- John Crank (1915 - 2006) originally worked in industry on the modelling and numerical solution of diffusion in polymers.
- In 1943, working with Phyllis Nicolson (1917-1968) on finite difference methods for the time dependent heat equation, he proposed the Crank-Nicolson method which has been incorporated universally in the solving of time-dependent problems since then.
- Their first result on this method was published in 1947.
- This is a special θ-method which corresponds to the choice $\theta = 0.5$.
- The stability function reads as

$$r_{CN}(\Delta t \mathbf{M}^{-1}\mathbf{K}) = (\mathbf{I} - 0.5\Delta t \mathbf{M}^{-1}\mathbf{K})^{-1}(\mathbf{I} + 0.5\Delta t \mathbf{M}^{-1}\mathbf{K}),$$

Finite element method:

$$\mathbf{M} = [M_{ij}]_{N\times\bar{N}}, \quad M_{ij} = \int\limits_{\Omega} \phi_j \phi_i \, dx =< \phi_j, \phi_i >,$$

$$\mathbf{K} = [K_{ij}]_{N\times\bar{N}}, \quad K_{ij} = B(\phi_j, \phi_i) =< grad\phi_j, grad\phi_i >$$

M: the mass matrix, **K**: the stiffness matrix.

$$\widetilde{\boldsymbol{\nu}}_i^n =< f(\cdot, t_n), \phi_i > .$$

Approximation property:

$$\boldsymbol{\nu}_i^n := \frac{1}{mes(\phi_i)} < f(\cdot, t_n), \phi_i > .$$

Scaling by multiplying with the matrix $\mathbf{D}^{-1}$, where $\mathbf{D} = diag[mes(\phi_i)]$.

Conditions for the qualitative properties for the CN-method in 1D

For linear FEM in 1D on uniform mesh: $\mathbf{D} = diag[h]$,

$$\mathbf{M} = \frac{h}{6}\left[\begin{array}{ccccc|cc} 4 & 1 & & \dots & 0 & 1 & 0 \\ 1 & 4 & 1 & & \vdots & 0 & 0 \\ & \ddots & \ddots & \ddots & & \vdots & \vdots \\ \vdots & & 1 & 4 & 1 & 0 & 0 \\ 0 & \dots & & 1 & 4 & 0 & 1 \end{array}\right],$$

$$\mathbf{K} = \frac{1}{h}\left[\begin{array}{ccccc|cc} 2 & -1 & & \dots & 0 & -1 & 0 \\ -1 & 2 & -1 & & \vdots & 0 & 0 \\ & \ddots & \ddots & \ddots & & \vdots & \vdots \\ \vdots & & -1 & 2 & -1 & 0 & 0 \\ 0 & \dots & & -1 & 2 & 0 & -1 \end{array}\right].$$

For FDM in 1D on unform mesh:

$$\mathbf{M} = h \left[\begin{array}{ccccc|cc} 1 & 0 & & \dots & 0 & 0 & 0 \\ 0 & 1 & 0 & & \vdots & 0 & 0 \\ & \ddots & \ddots & \ddots & & \vdots & \vdots \\ \vdots & & 0 & 1 & 0 & 0 & 0 \\ 0 & \dots & & 0 & 1 & 0 & 0 \end{array}\right],$$

$$\mathbf{K} = \frac{1}{h} \left[\begin{array}{ccccc|cc} 2 & -1 & & \dots & 0 & -1 & 0 \\ -1 & 2 & -1 & & \vdots & 0 & 0 \\ & \ddots & \ddots & \ddots & & \vdots & \vdots \\ \vdots & & -1 & 2 & -1 & 0 & 0 \\ 0 & \dots & & -1 & 2 & 0 & -1 \end{array}\right].$$

Our aim: give the conditions for the non-negativity preservation in 1D.
Conditions:

$$\mathbf{X}_1^{-1} \geq 0 \quad \text{and} \quad \mathbf{X}_1^{-1}\mathbf{X}_2 \geq 0.$$

$\mathbf{X}_1 - \mathbf{X}_2 = \mathbf{K}$, hence DNP property $\Leftrightarrow$ weak regular splitting of the (scaled) stiffness matrix

Our aim: give the conditions for the non-negativity preservation in 1D.
Conditions:

$$\mathbf{X}_1^{-1} \geq 0 \quad \text{and} \quad \mathbf{X}_1^{-1}\mathbf{X}_2 \geq 0.$$

$\mathbf{X}_1 - \mathbf{X}_2 = \mathbf{K}$, hence DNP property $\Leftrightarrow$ weak regular splitting of the (scaled) stiffness matrix

Using the special structure of the matrices, we can get strict conditions for the number $q := \frac{\Delta t}{h^2}$. (F., 1996)

Bounds for the Crank-Nicolson FDM on the uniform mesh:

- For each N:

$$q \leq 1.$$

Bounds for the Crank-Nicolson FDM on the uniform mesh:

- For each N:

$$q \leq 1.$$

- For each $N \geq 2$:

$$q \leq \frac{2}{\sqrt{3}} \simeq 1.1547.$$

Bounds for the Crank-Nicolson FDM on the uniform mesh:

- For each N:

$$q \leq 1.$$

- For each $N \geq 2$:

$$q \leq \frac{2}{\sqrt{3}} \simeq 1.1547.$$

- The necessary condition for existing an N_0 number such that the FDM is non-negativity preserving for all $N \geq N_0$:

$$q < 2(2 - \sqrt{2}) \simeq 1.17157$$

Bounds for the Crank-Nicolson linear FEM on the uniform mesh:

- For each N: iff under the condition

$$\frac{1}{3} \leq q \leq \frac{2}{3} \simeq 0.667.$$

Bounds for the Crank-Nicolson linear FEM on the uniform mesh:

- For each N: iff under the condition

$$\frac{1}{3} \leq q \leq \frac{2}{3} \simeq 0.667.$$

- For each $N \geq 2$: iff under the condition

$$\frac{1}{3} \leq q \leq \frac{\sqrt{5}}{3} \simeq 0.745$$

Bounds for the Crank-Nicolson linear FEM on the uniform mesh:

- For each N: iff under the condition

$$\frac{1}{3} \leq q \leq \frac{2}{3} \simeq 0.667.$$

- For each $N \geq 2$: iff under the condition

$$\frac{1}{3} \leq q \leq \frac{\sqrt{5}}{3} \simeq 0.745$$

- The necessary condition for existing an N_0 number such that the FEM is non-negativity preserving for all $N \geq N_0$:

$$\frac{1}{3} \leq q \leq \simeq 0.748.$$

The upper bound of the discrete maximum norm contractivity for the Crank-Nicolson method (Kraaijevanger,1992 and Horvath, 1996)

$$q \leq 1.5$$

The upper bound of the discrete maximum norm contractivity for the Crank-Nicolson method (Kraaijevanger,1992 and Horvath, 1996)

$$q \leq 1.5$$

Hence, DMNC $\not\Rightarrow$ DNP.

The upper bound of the discrete maximum norm contractivity for the Crank-Nicolson method (Kraaijevanger,1992 and Horvath, 1996)

$$q \leq 1.5$$

Hence, DMNC $\not\Rightarrow$ DNP.
Qualitative behaviour of the operator "after the death", i.e., in the case $q > 1.5$:

$$\|\boldsymbol{\nu}^n\|_\infty \leq C_\infty \|\boldsymbol{\nu}^0\|_\infty$$

Farago, Palencia (2004): $\quad 3 \leq C_\infty \leq\simeq 4.32$

Conditions for the qualitative properties of the CN-method in $\mathbb{R}^d$

Uniform regular simpletic mesh.

Our aim: give the conditions for the discrete weak maximum principle (DWMP) in $\mathbb{R}^d$. (Problem to show the DNP property!)

Theorem

Let the basis functions fulfill the conditions $\phi_i \geq 0$ and $\sum_{i=1}^{\bar{N}} \phi_i \equiv 1$. Then under the conditions

- $\mathbf{K}_{ij} \leq 0, \quad i \neq j, \;\; i = 1, ..., N, \;\; j = 1, ..., \bar{N},$
- $\mathbf{M}_{ij} + 0.5\Delta t\, \mathbf{K}_{ij} \leq 0, \quad i \neq j, \;\; i = 1, ..., N, \;\; j = 1, ..., \bar{N},$
- $\mathbf{M}_{ii} - 0.5\Delta t\, \mathbf{K}_{ii} \geq 0, \quad i = 1, ..., N$

the discrete model has the DWMP property.

Conditions for the qualitative properties in $\mathbb{R}^d$-cont'd

The contributions to the mass matrix and stiffness matrix over the simplex T with the surface S in $\mathbb{R}^d$:

$$\mathbf{M}_{ij}|_T = \frac{1}{(d+1)(d+2)}\mathrm{meas_d T},\ \ i \neq j$$

$$\mathbf{M}_{ii}|_T = \frac{2}{(d+1)(d+2)}\mathrm{meas_d T}$$

$$\mathbf{K}_{ij}|_T = -\frac{\mathrm{meas_{d-1}(S_i)\ meas_{d-1}(S_j)}}{d^2\mathrm{meas_d T}}\cos\gamma_{ij},\ \ i \neq j$$

$$\mathbf{K}_{ii}|_T = \frac{\mathrm{meas^2_{d-1}(S_i)}}{d^2\mathrm{meas_d T}}$$

where γ_{ij} is the interior angle.

Conditions for the qualitative properties in $\mathbb{R}^d$-cont'd

For the regular simplex with the length h:

$$\cos\gamma_{ij} = \frac{1}{d}$$

$$\mathrm{meas_d T} = \frac{h^d}{d!} \cdot \sqrt{\frac{d+1}{2^d}}$$

Conditions for the qualitative properties in $\mathbb{R}^d$-cont'd

For the regular simplex with the length h:

$$\cos\gamma_{ij} = \frac{1}{d}$$

$$\mathrm{meas_d T} = \frac{h^d}{d!} \cdot \sqrt{\frac{d+1}{2^d}}$$

The condition:

$$\frac{h^2}{d+2} \leq \Delta t \leq \frac{2h^2}{d(d+2)}$$

Conditions for the qualitative properties in $\mathbb{R}^d$-cont'd

For the regular simplex with the length h:

$$\cos\gamma_{ij} = \frac{1}{d}$$

$$\mathrm{meas_d T} = \frac{h^d}{d!} \cdot \sqrt{\frac{d+1}{2^d}}$$

The condition:

$$\frac{h^2}{d+2} \leq \Delta t \leq \frac{2h^2}{d(d+2)}$$

By this criteria the CN-method can be applied only when $d \leq 2$. For $d = 2$ the only possible choice: $q = 0.25$.

Some references

- I. F., R. Horváth [2006] SIAM Scientific Computing,
- I. F., R. Horváth [2009] IMA Numerical Analysis
- I. F., J. Karatson, S. Korotov.[2017] Math. and Comp. in Simulation

Thank you for your attention